DC2160

Flush

Semi Flush

Project Name _____

Fixture Type _____

Quantity _____

ILEX

DC2160 Flush

DC2160 Semi Flush

DP2160 Pendant

DC2160

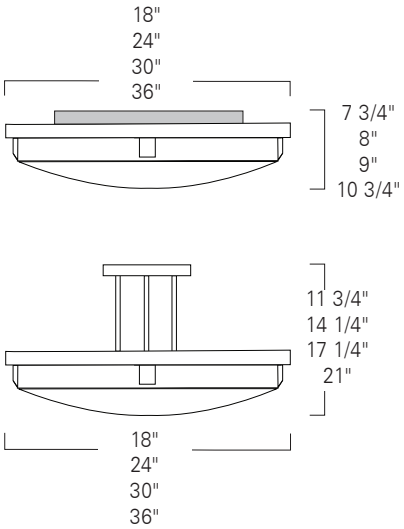

Example Ordering Guide: DC2160-30-NB-FL-LED-O-BN-SA/EM

LED-

DC2160	-		-		-		-		-	--	-		-	/ /

Model	Nominal Size	Detail	Mounting	Lamping	Overall Height	Finish	Options*
DC2160 Flush	**FLUSH MOUNT** **20** - 20" Dia x 7 3/4" OAH **26** - 26" Dia x 8" OAH **32** - 32" Dia x 9" OAH **38** - 38" Dia x 10 3/4" OAH	**BL** - With Blocke **NB** - No Blocks	**FL** - Flush Mount **SF** - Semi Flush Mount	**LED** **FLUSH MOUNT** **15**": 5200 Lumens, 49w **22**": 7000 Lumens, 62w **30**": 9000 Lumens, 70w **42**": 11,200 Lumens, 92w	**O** - Standard Overall Height OAH	**AB** - Architectural Bronze **BN** - Brushed Nickel **PB** - Polished Brass **PN** - Polished Nickel **SB** - Satin Brass	/ / **SA** - Satin Acrylic **EM** - Emergency Battery Pack **TDW** - Top Diffuser, White Acrylic** **TDC** - Top Diffuser, Clear Acrylic**
DC2160 Semi Flush Mount	**SEMI-FLUSH MOUNT** **20** - 20" Dia x 11 3/4" OAH **26** - 26" Dia x 14 1/4" OAH **32** - 32" Dia x 17 1/4" OAH **38** - 38" Dia x 21" OAH	**X** - Custom Consult factory for other.	**X** - Custom Consult factory for other.	**SEMI-FLUSH MOUNT** **15**": 5200 Lumens, 47w **22**": 7000 Lumens, 62w **30**": 10,000 Lumens, 70w **42**": 13,000 Lumens, 92w **54**": 16,000 Lumens, 133w **X** - Custom **Note:** Flush Mount and Semi Flush Mount **LED** kits are different **Note:** LED is 120v-277v standard. GU24 and E26 are 120v standard. Consult factory for other voltages.	**X** - Custom: Semi Flush only indicate in inches **Note:** Consult factory for Overall Heights that are shorter than standard.	**X** - Custom Consult factory for other.	*separate multiples with "/" **Semi Flush only **Note**: Consult factory for EM availability. **Note:** TWD will reduce light output

Dry Location Rated and UL/ETL Listed

Note: All finishes are now powder coat

REV-4-2022

DISCLAIMER:

ILEX Architectural Lighting reserve the right to change specifications related to its product at anytime. USA Made indicates product is manufactured in Michigan, facility. Phone: 269-247-1252