DP2160

Pendant

Project Name _____

Fixture Type _____

Quantity _____

ILEX

DP2160

DP2160

DP2160

DP2160

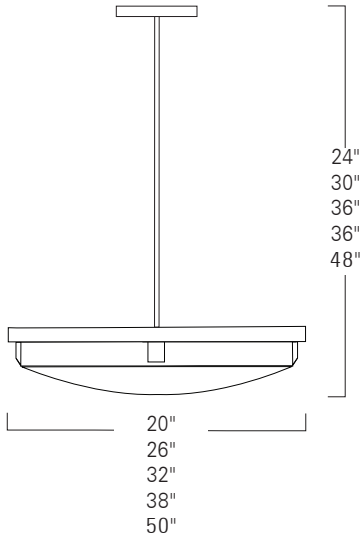

DC2160 Flush

DC2160 Semi Flush

Example : DP2160-26x30-BL-S-LED-O-SB-TDW/EM

LED

DP2160	-		-		-		-		-		-		-	/ /

Model	Nominal Size	Detail	Mounting	Lamping	Overall Height	Finish	Options*
DP2160 Pendant	**20** - 20" Dia x 24" OAH **26** - 26" Dia x 30" OAH **32** - 32" Dia x 36" OAH **38** - 38" Dia x 36" OAH **50** - 50" Dia x 48" OAH **X** - Custom Consult factory for other.	**BL** - With Block **NB** - No Block **X** - Custom Consult factory for other.	**S** - Single Stem **M** - Multipipe **B** - Beaded Chain **C** - Cable **X** - Custom Consult factory for other.	**LED** **15"** 5200 Lumens, 47w **22"** 7000 Lumens, 150w **30"** 10,000 Lumens, 70w **42"** 13,000 Lumens, 92w **54"** 16,000 Lumens, 133w **X** - Custom *Includes standard downlight 900 Lumens, 18w, 25°Beam * All LED are 90CRI; 120-277v 0-10VDC Dimming 1% **Note:** GU24 and E26 are 120v standard. Consult factory for other voltages.	**0** - Standard Overall Height OAH **X** - Custom; Indicate in inches **Note:** Consult factory for when OAH is shorter than standard.	**AB** - Architectural Bronze **BN** - Brushed Nickel **PB** - Polished Brass **PN** - Polished Nickel **SB** - Satin Brass **X** - Custom **Note:** Consult factory for other.	/ / **SA** - Satin Acrylic **EM** - Emergency Battery Pack **NDL** - No Downlight **TDW** - Top Diffuser, White Acrylic **SWV** - 45° Swivel Canopy *separate multiples with "/" **Note:** Consult factory for EM availability. **Note:** TWD will reduce light output

Dry Location Rated and UL/ETL Listed

Note: All finishes are now powder coat

REV-4-2022

DISCLAIMER:

ILEX Architectural Lighting reserve the right to change specifications related to its product at anytime. USA Made indicates product is manufactured in Michigan, facility. Phone: 269-247-1252